499246

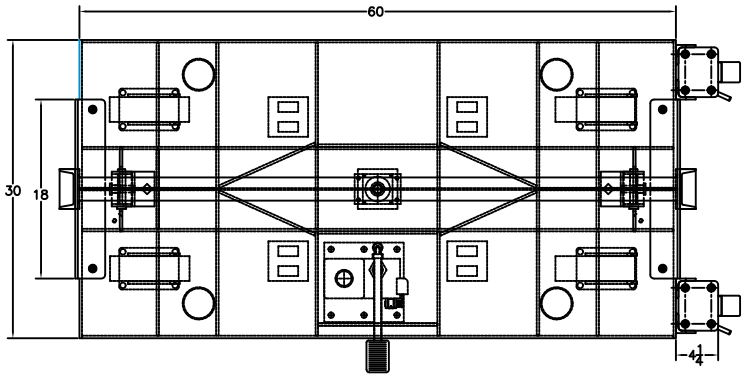

4,000 Capacity Die Handler

- Heavy–duty steel adjustable clamps for gripping the upper die set for separation.
- Floor lock.
- Precision telescoping guide tubes.
- Rigid die hangers with 360 degree indexing plate.
- Die cart allows you to transport, sepatate, and present your dies for sevice and maintenance.

Specs

• Capacity:	4,000 lbs
• Table top:	60” x 30”
• Raised height:	55”
• Lowered height:	32”
• Minimum gantry clearance:	20.5”
• Caster size:	8”
• Casters:	2 rigid/ 2 swivel
• Die size:	54” x 30”
• Weight:	1,069 lbs

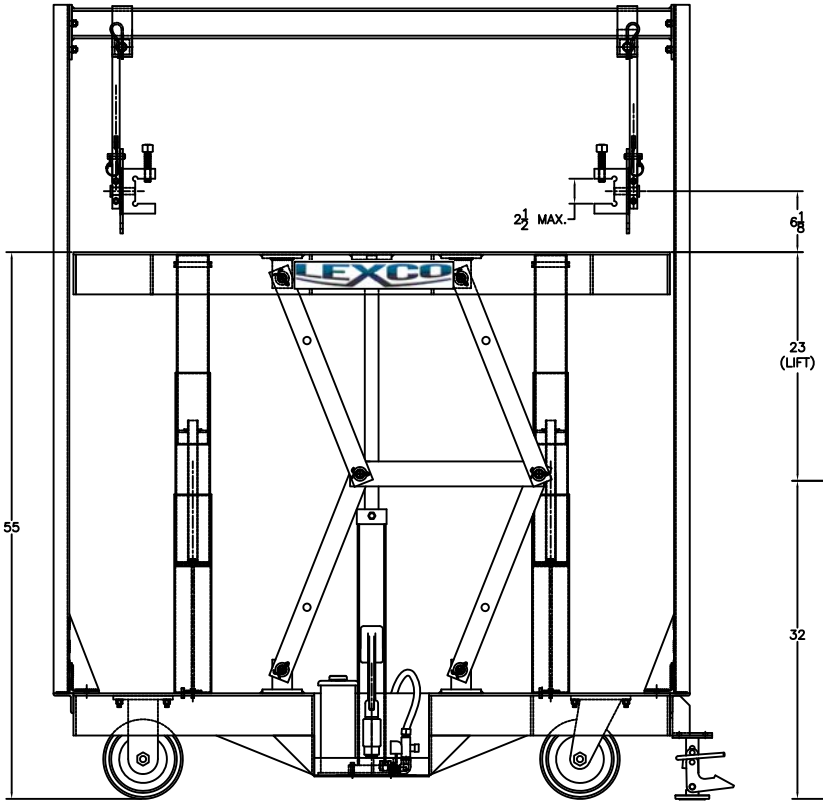

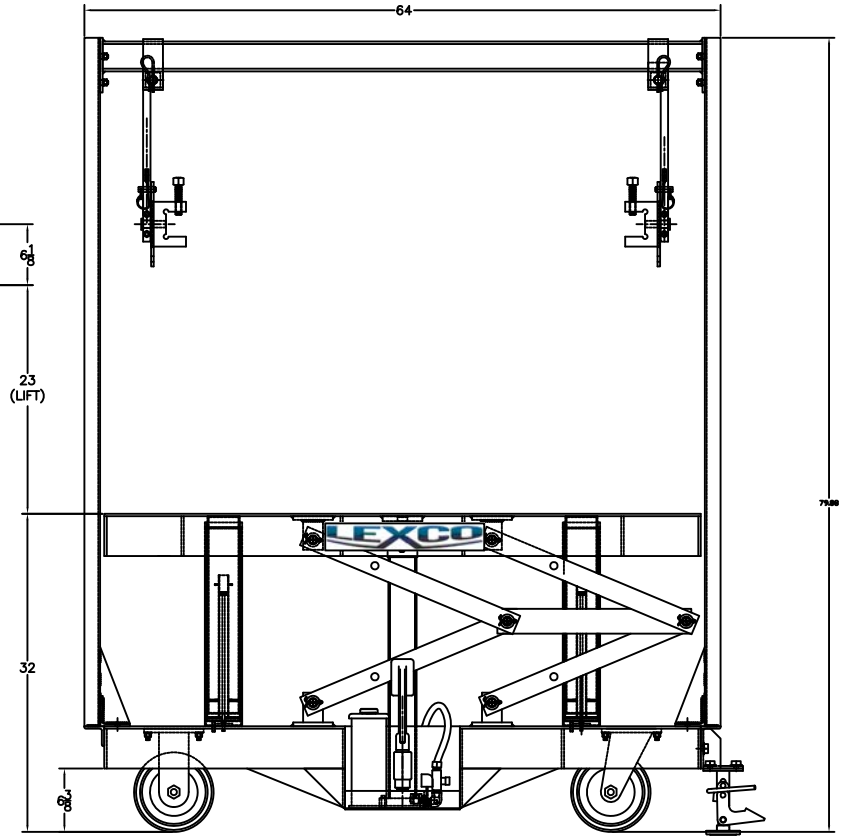

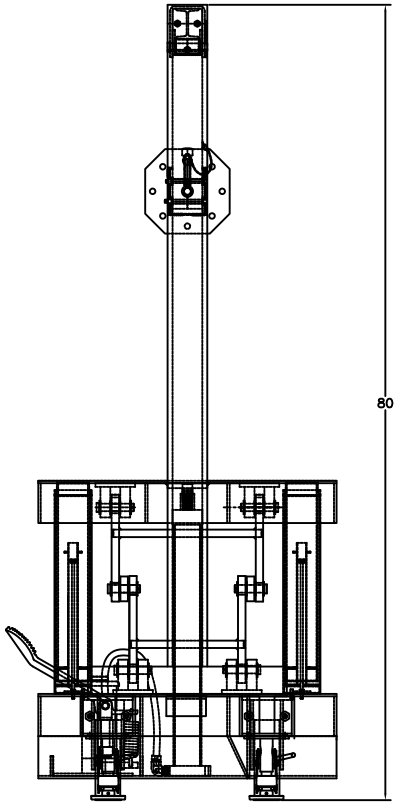

THIS DRAWING IN ALL PARTICULARS IS WESCO INDUSTRIAL PRODUCTS INC. PROPERTY. ALL RIGHTS OF DESIGN, INVENTION OR USE OF ARE RESERVED.

PRINT ISSUED
APR. 28, 2016
WESCO MANUFACTURING ENGINEERING DEPARTMENT

REV	DATE	DESCRIPTION	BY
B	XXXX, 11–20–09	CASTER MOUNTING; ADDED FEB 14, 10209 ADDED 16 OFF, 1 WAS 22	J G L
A	6419, 03–28–08	PRODUCTION RELEASE	R D S

REVISIONS

WESCO INDUSTRIAL PRODUCTS INC.
NORTH WALES PENNA. 19454

PART NAME: DH–3005–43, 4000 lb. 23” LIFT
SHOWN WITH RIGID DIE HANGER w/INDEXING PLATE

TOLERANCE UNLESS OTHERWISE SPECIFIED
FRACTION ± 1/64 | 3 PLACE DECIMAL ± .005 | 2 PLACE DECIMAL ± .01
ANGULAR ± 1–1/2° | SHEET 1 OF 1
BREAK ALL SHARP EDGES AND REMOVE ALL BURRS

DRAWN: J.L. 03–28–08
CHECKED:
APP. ENGR.
SCALE: 1” = 1”
499246 REV B