261056

POWERED STACKERS

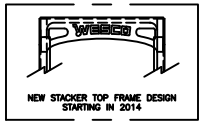

Features:

- Adjustable base legs available on fork models.
- Fixed platforms 24x24, 24x27, 30x32
- Reinforced frame and base.
- Double chain, lift support.
- Heavy–duty pump.
- Ergonomic "D" handles.
- 110V AC models available.

FIXED PLATFORM MODELS

Model:	PSPL–60–3032–30S–2K
Lift Height:	60"
O.A.H:	72"
Weight:	443
Capacity:	2,000 lbs
Load Center:	18"
Platform LxW:	30" x 32"
Base Leg ID/OD:	30"/36"

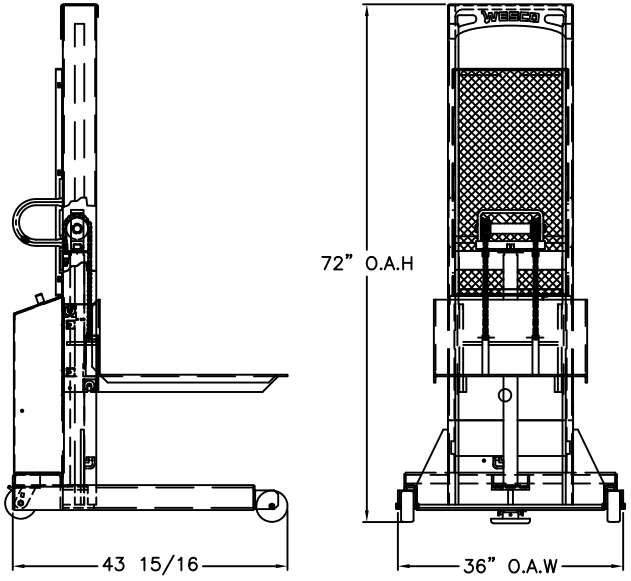

2,000 LBS POWER STACKER PARTS LIST 56"/60" LIFT

1	051179	HYDRAULIC CYLINDER	1
2	109101	POWER UNIT	1
3	109099	BATTERY	1
4	109104	VOLTMETER	1
5	052779	BATTERY CABLE (NEG.)	1
6	052780	BATTERY CABLE (POS.)	1
7	109150	BATTERY CHARGER	1
8	125824	HYDRAULIC HOSE	1
9	052726	REMOTE CONTROL ASS'Y	1
10	109325	SWITCH	1
11	050781	LIFT CHAIN ASS'Y	2
12	050776	ROLLER CARRIER ASS'Y	2
13	052010	FLOOR LOCK	1
14	053769	WHEEL	2
15	150024	CASTER	2
16	109117	SOLENOID	1

HYDRAULIC CYLINDER PARTS LIST

17	051074	CYLINDER	1
18	051045	PISTON	1
19	050006	CYLINDER CAP	1
20	220171	SEAL KIT	1

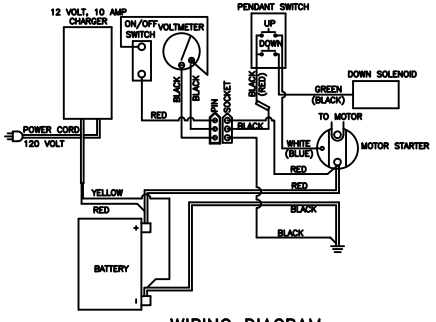

WIRING DIAGRAM

THIS DRAWING IN ALL PARTICULARS IS WESCO INDUSTRIAL PRODUCTS INC. PROPERTY. ALL RIGHTS OF DESIGN, INVENTION OR USE OF ARE RESERVED.

PRINT ISSUED

OTC. 16, 2006

WESCO MANUFACTURING ENGINEERING DEPARTMENT

APP | ECN & DATE | REV. | REVISIONS

WESCO INDUSTRIAL PRODUCTS INC.
NORTH WALES PENNA. 19454

PART NAME
PSPL–60–3032–30S–2K

DRAWN: KL 08–07–01
CHECKED: PS 08–16–01
APP. ENGR.
SCALE: 1" = 20"

TOLERANCE UNLESS OTHERWISE SPECIFIED

FRACTION	3 PLACE DECIMAL	2 PLACE DECIMAL
± 1/64	± .005	± .01

ANGULAR ± 1–1/2° | SHEET 1 OF 2

BREAK ALL SHARP EDGES AND REMOVE ALL BURRS

B– 261056 REV