261026

POWERED STACKER 1,000 LBS

Features:

- Remote control, floor lock, and safety screen are standard on all models.
- With a minimally charged battery, unit can be used while recharging.
- Three light LED charge status indicator – No extra cost.
- Easy to read illuminated battery status voltmeter – No extra cost.
- 12V DC battery or 110V AC units available.

PLATFORM MODELS

- 24" X 24" OR 30" X 32" Platform size L X W
- 5" phenolic wheels on front, 4" phenolic swivel casters on rear.
- 110V AC models available.

Model:	PESPL–68–3032
Lift Height:	68"
O.A.H	80"
Weight:	467 lbs.
Leg ID/OD:	25.5"/32"
Capacity:	1,000 lbs.
Load Center:	18"

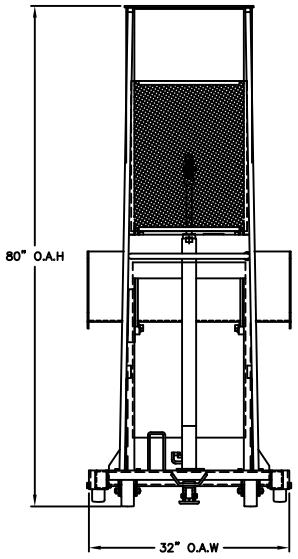

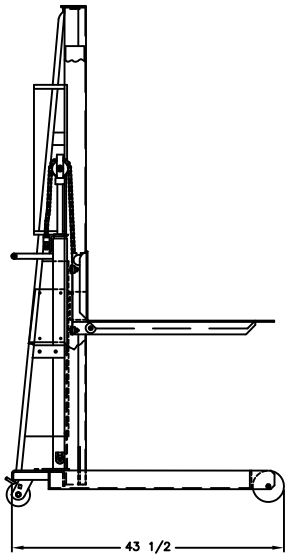

POWER–LIFT STACKER PARTS LIST
64"/68" LIFT

1	051164	HYDRAULIC CYLINDER	1
2	109101	POWER UNIT	1
3	109102	BATTERY	1
4	109104	VOLTMETER	1
5	052769	BATTERY CABLE (NEG.)	1
6	052770	BATTERY CABLE (POS.)	1
7	109114	BOARD: INDICATOR LIGHT	1
8	109150	BATTERY CHARGER	1
9	125824	HYDRAULIC HOSE	1
10	052726	REMOTE CONTROL ASS'Y	1
11	109325	SWITCH	1
12	050771	LIFT CHAIN ASS'Y	1
13	260143	ROLLER CARRIER ASS'Y	1
14	150001	FLOOR LOCK	1
15	053769	WHEEL	2
16	054265	CASTER	2
17	109117	SOLENOID	1

HYDRAULIC CYLINDER PARTS LIST

18	051193	CYLINDER	1
19	051196	PISTON	1
20	051198	CYLINDER CAP	1
21	220170	SEAL KIT	1

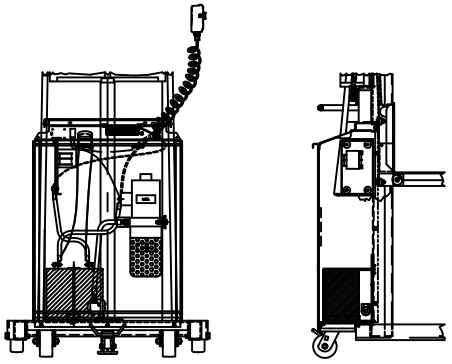

POWER UNIT

THIS DRAWING IN ALL PARTICULARS IS WESCO INDUSTRIAL PRODUCTS INC. PROPERTY. ALL RIGHTS OF DESIGN, INVENTION OR USE OF ARE RESERVED.

PRINT ISSUED

OTC. 16, 2006

WESCO MANUFACTURING
ENGINEERING DEPARTMENT

APP | ECN & DATE | REV. | REVISIONS

WESCO INDUSTRIAL PRODUCTS INC.
NORTH WALES PENNA. 19454

PART NAME: PESPL–68–3032

DRAWN: KL 08–07–01
CHECKED: PS 08–16–01
APP. ENGR.
SCALE: 1" = 20"

TOLERANCE UNLESS OTHERWISE SPECIFIED

FRACTION	3 PLACE DECIMAL	2 PLACE DECIMAL
± 1/64	± .005	± .01

ANGULAR ± 1–1/2° SHEET 1 OF 2

BREAK ALL SHARP EDGES AND REMOVE ALL BURRS

B– 261026 REV Y